MAGNETIC LIQUID LEVEL GAUGE

A Magnet embedded float will move up and down inside the chamber according to the liquid level in the main vessel. A totally isolated visual indicator housing having a series of flags or a follower is clamped on the chamber. The individual flags or the follower contain an alignment magnet which couples with the float magnets as the float moves up or down within the chamber. Float movement rotates the flags and changes their colour or moves the follower to the point of level. The position of follower or the point at which the flags changes colour, represents the actual level in the main vessel.

APPLICATION

Gauge Glass has got limitations for use in flammable, toxic, corrosive process liquid and also High Temperatures and Pressures application. Rugged construction is suitable for High and Low Temperature and High Pressure and vacuum applications. This can be used for most process liquids encountered in the Chemical, Fertilizer, and Refinery, Petro chemical. Thermal Power Stations, Steel, Oil, Food and Automotive Industries.

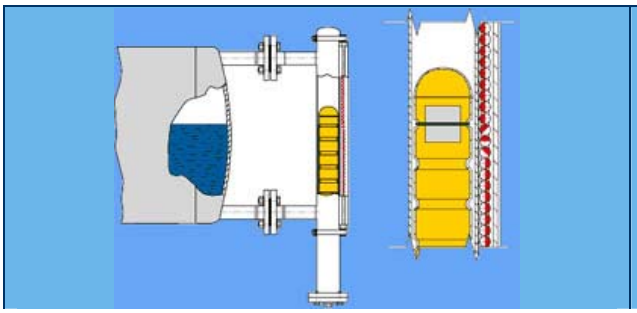

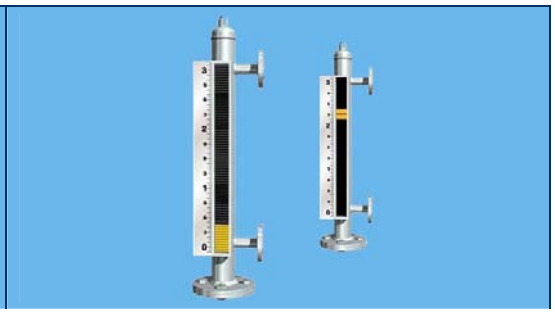

Accuracy - ± 5 mm.

Specific Gravity – 0.6 to 1.2

Model Number of Magnetic Level Gauge

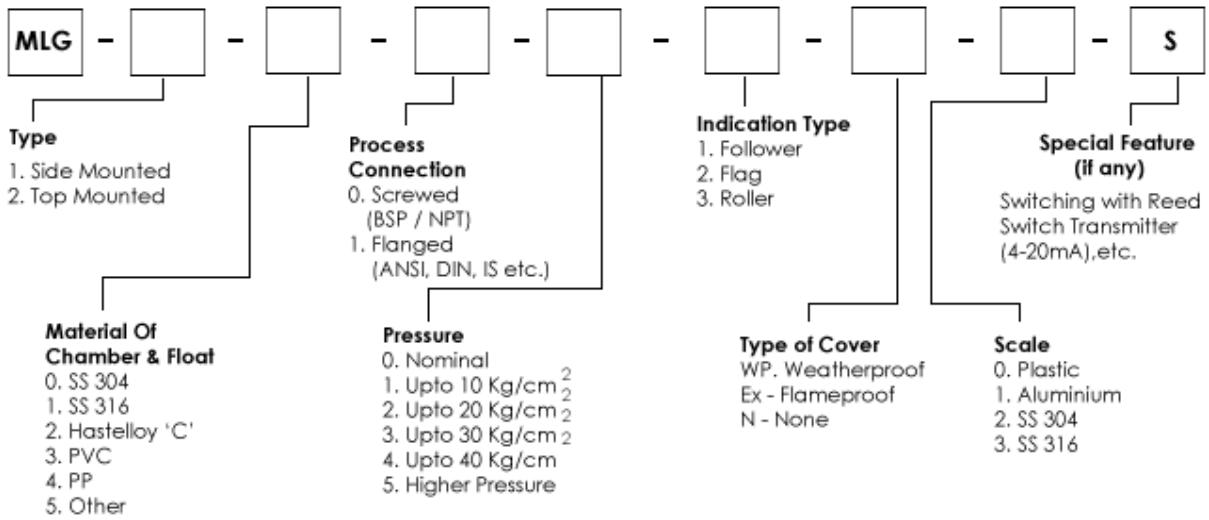

D. K. Instruments Pvt. Ltd.

An ISO 9001:2008 Certified Company

76/2, Selimpur Road, Dhakuria, Kolkata – 700 031.

Ph. No.: 91-33-2415 1310 / 2405 0944, Fax: 91-33-2415 2311.

E-mail: info@dkinstruments.com, Web Site: www.dkinstruments.com

Marketed By:

Cat. No. 0010